NAVIGATION

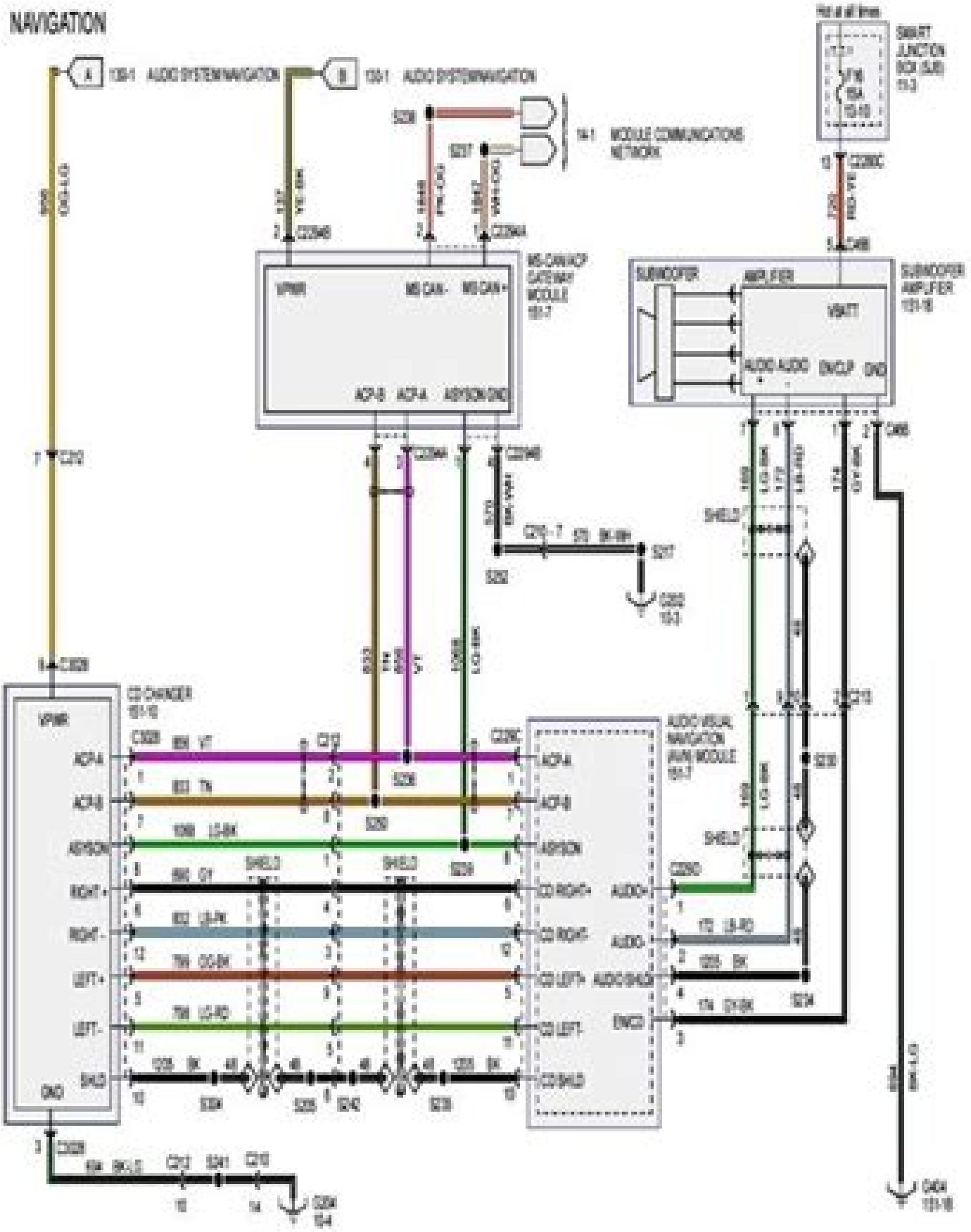
AUDIO SYSTEM/NAVIGATION
AUDIO SYSTEM/NAVIGATION
MODULE COMMUNICATIONS NETWORK
MS-CAN/ACP GATEWAY MODULE
SUBWOOFER AMPLIFIER
SUBWOOFER
CD CHANGER
AUDIO VISUAL NAVIGATION (AVN) MODULE
SHIELD

1995 Ford Explorer Radio Wiring Harness

Kathleen Armour

1995 Ford Explorer Radio Wiring Harness:

Truck and Van Manual, 1991-1995 Chilton Automotive Books,The Nichols/Chilton,Chilton,(Chilton) Chilton,1994 Documents specifications repairs and servicing procedures for individual models and provides information on component repair and overhaul The Complete Car Cost Guide ,1995 **Chilton's Automotive Industries** ,1994 4x4x, Pickups, and Vans Buying Guide 1995 Consumer Guide,Consumer Guide Editors,1995-03-29 Here is information on all the 1995 models including key plus and minus points performance evaluations complete specs and charts latest prices safety issues best buys and more all in an easy to understand format **Automotive Industries** ,1994 Popular Science ,2002-12 Popular Science gives our readers the information and tools to improve their technology and their world The core belief that Popular Science and our readers share The future is going to be better and science and technology are the driving forces that will help make it better **1993 Mitchell Domestic Light Trucks & Vans Service & Repair** Mitchell International,1993

The 4x4'S, Pickups and Vans Buying Guide 2003 Consumer Guide,2003-03 Updated for 2003 this comprehensive guide contains profiles of more than 60 new sport utility vehicles pickup trucks and vans with complete specifications on cargo dimensions and payloads plus hands on reviews up to date prices and more **Standard Catalog of 4 X 4's** Robert C. Ackerson,1993 This comprehensive guide covers American four wheel drive vehicles including trucks vans and sport utility vehicles Updated information includes AMC Chevrolet Dodge Ford Jeep International Scout GMC and other manufacturers All 4x4 enthusiasts will find everything they need to know about their favorite vehicle including identification and model numbers body types production totals and other specifications **Automobile Book 1998** Consumer Guide,Consumer Guide Editors,1998-01-19 Whether you re interested in passenger cars sport utility vehicles trucks or minivans all are discussed in this invaluable guide to the new 1998 vehicles Over 165 cars trucks and vans are reviewed and rated in every important category from price to handling to options Don t make an uninformed decision get the guide that takes the hassle out of car buying *Car and Driver* ,1996 *Automobile Book 1999* Consumer Guide,Consumer Guide Editors,1999-01-30 Featuring profiles and photos of over 170 passenger cars minivans and four wheel drive vehicles available for 1999 this book includes the latest suggested retail and dealer invoice prices for all models *Sports Cars Illustrated* ,1996-04 *Popular Mechanics* ,2000-01 Popular Mechanics inspires instructs and influences readers to help them master the modern world Whether it s practical DIY home improvement tips gadgets and digital technology information on the newest cars or the latest breakthroughs in science PM is the ultimate guide to our high tech lifestyle **Automotive Electronics and Engine Performance** Davis N. Dales,F. J. Thiessen,1995 This new edition is designed for moderately experienced students taking courses in Automotive Engine Performance Automotive Engine Diagnosis and Tune Up Automotive Electronics and Engine Performance Automotive Engine Electronics and Emission Control in two year and proprietary schools This new edition reorganizes the text to reflect the new emphasis on diagnosis and service procedures The goal is to provide a thorough up to

date coverage of the function design operation diagnosis service and repair of vehicles and systems Low Rider ,1995

Yeah, reviewing a ebook **1995 Ford Explorer Radio Wiring Harness** could accumulate your near associates listings. This is just one of the solutions for you to be successful. As understood, capability does not recommend that you have extraordinary points.

Comprehending as with ease as concord even more than supplementary will find the money for each success. next-door to, the declaration as with ease as keenness of this 1995 Ford Explorer Radio Wiring Harness can be taken as competently as picked to act.

https://forums.acdsystems.com/files/virtual-library/index.jsp/2003_toyota_corolla_parts.pdf

Table of Contents 1995 Ford Explorer Radio Wiring Harness

1. Understanding the eBook 1995 Ford Explorer Radio Wiring Harness
    - The Rise of Digital Reading 1995 Ford Explorer Radio Wiring Harness
    - Advantages of eBooks Over Traditional Books
2. Identifying 1995 Ford Explorer Radio Wiring Harness
    - Exploring Different Genres
    - Considering Fiction vs. Non-Fiction
    - Determining Your Reading Goals
3. Choosing the Right eBook Platform
    - Popular eBook Platforms
    - Features to Look for in an 1995 Ford Explorer Radio Wiring Harness
    - User-Friendly Interface
4. Exploring eBook Recommendations from 1995 Ford Explorer Radio Wiring Harness
    - Personalized Recommendations
    - 1995 Ford Explorer Radio Wiring Harness User Reviews and Ratings
    - 1995 Ford Explorer Radio Wiring Harness and Bestseller Lists
5. Accessing 1995 Ford Explorer Radio Wiring Harness Free and Paid eBooks

    - 1995 Ford Explorer Radio Wiring Harness Public Domain eBooks
    - 1995 Ford Explorer Radio Wiring Harness eBook Subscription Services
    - 1995 Ford Explorer Radio Wiring Harness Budget-Friendly Options
6. Navigating 1995 Ford Explorer Radio Wiring Harness eBook Formats
    - ePub, PDF, MOBI, and More
    - 1995 Ford Explorer Radio Wiring Harness Compatibility with Devices
    - 1995 Ford Explorer Radio Wiring Harness Enhanced eBook Features
7. Enhancing Your Reading Experience
    - Adjustable Fonts and Text Sizes of 1995 Ford Explorer Radio Wiring Harness
    - Highlighting and Note-Taking 1995 Ford Explorer Radio Wiring Harness
    - Interactive Elements 1995 Ford Explorer Radio Wiring Harness
8. Staying Engaged with 1995 Ford Explorer Radio Wiring Harness
    - Joining Online Reading Communities
    - Participating in Virtual Book Clubs
    - Following Authors and Publishers 1995 Ford Explorer Radio Wiring Harness
9. Balancing eBooks and Physical Books 1995 Ford Explorer Radio Wiring Harness
    - Benefits of a Digital Library
    - Creating a Diverse Reading Collection 1995 Ford Explorer Radio Wiring Harness
10. Overcoming Reading Challenges
    - Dealing with Digital Eye Strain
    - Minimizing Distractions
    - Managing Screen Time
11. Cultivating a Reading Routine 1995 Ford Explorer Radio Wiring Harness
    - Setting Reading Goals 1995 Ford Explorer Radio Wiring Harness
    - Carving Out Dedicated Reading Time
12. Sourcing Reliable Information of 1995 Ford Explorer Radio Wiring Harness
    - Fact-Checking eBook Content of 1995 Ford Explorer Radio Wiring Harness
    - Distinguishing Credible Sources
13. Promoting Lifelong Learning
    - Utilizing eBooks for Skill Development

- Exploring Educational eBooks
14. Embracing eBook Trends
    - Integration of Multimedia Elements
    - Interactive and Gamified eBooks

1995 Ford Explorer Radio Wiring Harness Introduction

Free PDF Books and Manuals for Download: Unlocking Knowledge at Your Fingertips In todays fast-paced digital age, obtaining valuable knowledge has become easier than ever. Thanks to the internet, a vast array of books and manuals are now available for free download in PDF format. Whether you are a student, professional, or simply an avid reader, this treasure trove of downloadable resources offers a wealth of information, conveniently accessible anytime, anywhere. The advent of online libraries and platforms dedicated to sharing knowledge has revolutionized the way we consume information. No longer confined to physical libraries or bookstores, readers can now access an extensive collection of digital books and manuals with just a few clicks. These resources, available in PDF, Microsoft Word, and PowerPoint formats, cater to a wide range of interests, including literature, technology, science, history, and much more. One notable platform where you can explore and download free 1995 Ford Explorer Radio Wiring Harness PDF books and manuals is the internets largest free library. Hosted online, this catalog compiles a vast assortment of documents, making it a veritable goldmine of knowledge. With its easy-to-use website interface and customizable PDF generator, this platform offers a user-friendly experience, allowing individuals to effortlessly navigate and access the information they seek. The availability of free PDF books and manuals on this platform demonstrates its commitment to democratizing education and empowering individuals with the tools needed to succeed in their chosen fields. It allows anyone, regardless of their background or financial limitations, to expand their horizons and gain insights from experts in various disciplines. One of the most significant advantages of downloading PDF books and manuals lies in their portability. Unlike physical copies, digital books can be stored and carried on a single device, such as a tablet or smartphone, saving valuable space and weight. This convenience makes it possible for readers to have their entire library at their fingertips, whether they are commuting, traveling, or simply enjoying a lazy afternoon at home. Additionally, digital files are easily searchable, enabling readers to locate specific information within seconds. With a few keystrokes, users can search for keywords, topics, or phrases, making research and finding relevant information a breeze. This efficiency saves time and effort, streamlining the learning process and allowing individuals to focus on extracting the information they need. Furthermore, the availability of free PDF books and manuals fosters a culture of continuous learning. By removing financial barriers, more people can access educational resources and pursue lifelong learning, contributing to personal growth and professional development. This democratization of knowledge promotes

intellectual curiosity and empowers individuals to become lifelong learners, promoting progress and innovation in various fields. It is worth noting that while accessing free 1995 Ford Explorer Radio Wiring Harness PDF books and manuals is convenient and cost-effective, it is vital to respect copyright laws and intellectual property rights. Platforms offering free downloads often operate within legal boundaries, ensuring that the materials they provide are either in the public domain or authorized for distribution. By adhering to copyright laws, users can enjoy the benefits of free access to knowledge while supporting the authors and publishers who make these resources available. In conclusion, the availability of 1995 Ford Explorer Radio Wiring Harness free PDF books and manuals for download has revolutionized the way we access and consume knowledge. With just a few clicks, individuals can explore a vast collection of resources across different disciplines, all free of charge. This accessibility empowers individuals to become lifelong learners, contributing to personal growth, professional development, and the advancement of society as a whole. So why not unlock a world of knowledge today? Start exploring the vast sea of free PDF books and manuals waiting to be discovered right at your fingertips.

FAQs About 1995 Ford Explorer Radio Wiring Harness Books

How do I know which eBook platform is the best for me? Finding the best eBook platform depends on your reading preferences and device compatibility. Research different platforms, read user reviews, and explore their features before making a choice. Are free eBooks of good quality? Yes, many reputable platforms offer high-quality free eBooks, including classics and public domain works. However, make sure to verify the source to ensure the eBook credibility. Can I read eBooks without an eReader? Absolutely! Most eBook platforms offer webbased readers or mobile apps that allow you to read eBooks on your computer, tablet, or smartphone. How do I avoid digital eye strain while reading eBooks? To prevent digital eye strain, take regular breaks, adjust the font size and background color, and ensure proper lighting while reading eBooks. What the advantage of interactive eBooks? Interactive eBooks incorporate multimedia elements, quizzes, and activities, enhancing the reader engagement and providing a more immersive learning experience. 1995 Ford Explorer Radio Wiring Harness is one of the best book in our library for free trial. We provide copy of 1995 Ford Explorer Radio Wiring Harness in digital format, so the resources that you find are reliable. There are also many Ebooks of related with 1995 Ford Explorer Radio Wiring Harness. Where to download 1995 Ford Explorer Radio Wiring Harness online for free? Are you looking for 1995 Ford Explorer Radio Wiring Harness PDF? This is definitely going to save you time and cash in something you should think about. If you trying to find then search around for online. Without a doubt there are numerous these available and many of them have the freedom. However without doubt you receive whatever you purchase. An alternate way to get ideas is always to check another 1995 Ford Explorer Radio Wiring Harness. This method for see exactly what may be included and

adopt these ideas to your book. This site will almost certainly help you save time and effort, money and stress. If you are looking for free books then you really should consider finding to assist you try this. Several of 1995 Ford Explorer Radio Wiring Harness are for sale to free while some are payable. If you arent sure if the books you would like to download works with for usage along with your computer, it is possible to download free trials. The free guides make it easy for someone to free access online library for download books to your device. You can get free download on free trial for lots of books categories. Our library is the biggest of these that have literally hundreds of thousands of different products categories represented. You will also see that there are specific sites catered to different product types or categories, brands or niches related with 1995 Ford Explorer Radio Wiring Harness. So depending on what exactly you are searching, you will be able to choose e books to suit your own need. Need to access completely for Campbell Biology Seventh Edition book? Access Ebook without any digging. And by having access to our ebook online or by storing it on your computer, you have convenient answers with 1995 Ford Explorer Radio Wiring Harness To get started finding 1995 Ford Explorer Radio Wiring Harness, you are right to find our website which has a comprehensive collection of books online. Our library is the biggest of these that have literally hundreds of thousands of different products represented. You will also see that there are specific sites catered to different categories or niches related with 1995 Ford Explorer Radio Wiring Harness So depending on what exactly you are searching, you will be able tochoose ebook to suit your own need. Thank you for reading 1995 Ford Explorer Radio Wiring Harness. Maybe you have knowledge that, people have search numerous times for their favorite readings like this 1995 Ford Explorer Radio Wiring Harness, but end up in harmful downloads. Rather than reading a good book with a cup of coffee in the afternoon, instead they juggled with some harmful bugs inside their laptop. 1995 Ford Explorer Radio Wiring Harness is available in our book collection an online access to it is set as public so you can download it instantly. Our digital library spans in multiple locations, allowing you to get the most less latency time to download any of our books like this one. Merely said, 1995 Ford Explorer Radio Wiring Harness is universally compatible with any devices to read.

Find 1995 Ford Explorer Radio Wiring Harness :

2003 toyota corolla parts
~~2004 cat c15 acert code 98~~
2003 vauxhall frontera manual
2004 ford explorer keypad code location
2003 yamaha l225txrx outboard service repair maintenance manual factory
2003 vw beetle tdi owners manual
2004 dodge caravan owners manual sxt

2004 b series truck shop service repair manual
2004 2008 kawasaki kaf620 mule 3010 utv repair manual
2003 toyota sequoia manual
2003 vulcan 500 manual
2003 yamaha vx200tlrb outboard service repair maintenance manual factory
2003 yamaha f25mshb outboard service repair maintenance manual factory
2004 chrysler sebring manual
2004 ford explorer pats problems

1995 Ford Explorer Radio Wiring Harness :

about florida center for reading research fcrr - May 05 2023
web improving reading through science mission fcrr contributes to the quality accessibility use and relevance of reading and reading related research by leveraging our talent resources and partnerships to conduct basic and applied interdisciplinary research on all aspects of reading and reading related skills to benefit learners
reading first in florida five years of improvement sage - Jan 01 2023
web five years of reading comprehension data in florida reading first schools were analyzed to address questions regarding student improvement reduction in the achievement gap efficacy of site visits to schools making no achievement gains and effects of student mobility on growth in reading comprehension
watch nasa build its first robotic moon rover nasa - Oct 18 2021
web nov 3 2023 months of final assembly and testing lie ahead before viper is ready to ship to the astrobotic payload processing facility in florida in mid 2024 viper s lunar landing atop mons mouton is scheduled for late 2024 where it will get a close up view of the lunar surface and measure the location and concentration of water ice and other resources
florida center for reading research youtube - Jan 21 2022
web the florida center for reading research is a multidisciplinary research center at florida state university that was established in 2002 by the governor s office and legislature currently
kindergarten and first grade florida center for reading research fcrr - Sep 09 2023
web for questions about the use of these materials please contact the florida center for reading research at fcrr fcrr org kindergarten and first grade student center activities phonological awareness phonics fluency vocabulary comprehension
where companies want employees to work and where - Sep 16 2021
web november 02 2023 summary companies are trying various strategies to adjust to a new normal in work modalities

ranging from fully in office to fully remote to a mix of both a

graduate resources florida center for reading research - Jun 25 2022

web the florida center for reading research is committed to providing quality training and resources to support florida state university graduate students graduate students may have unique needs related to career planning while in graduate school as well as questions about how to achieve post graduate career goals both inside and outside the academy

florida center for reading research fcrr - Oct 10 2023

web research projects learn more about recently completed and ongoing research projects undertaken by fcrr and the faculty involved discover how fcrr improves reading instruction intervention and assessment in florida and beyond

second and third grade florida center for reading research - Oct 30 2022

web for questions about the use of these materials please contact the florida center for reading research at fcrr fcrr org second grade and third grade student center activities phonemic awareness phonics fluency vocabulary comprehension

the florida center for reading research tallahassee fl facebook - Feb 19 2022

web the florida center for reading research tallahassee florida 11 273 likes 42 talking about this 230 were here the florida center for reading research fcrr is a multidisciplinary research

florida s reading first assessment principal s guide ed - Jul 07 2023

web the four types of assessment required by reading first are as follows screening screening tests provide the teacher a beginning assessment of the child s preparation for grade level reading instruction they are a fi rst alert that a child will need extra help to make adequate progress in reading during the year

for educators florida center for reading research fcrr - Aug 08 2023

web welcome to fcrr we are dedicated to ensuring that all children are reading and succeeding in school teachers instructional coaches clinicians principals and other school staff are critical to achieving that vision here educators can find resources to support their knowledge and practice

florida s reading first assessment principal s guide 2005 - Sep 28 2022

web florida center for reading research florida state university city centre building 227 north bronough street suite 7250 tallahassee fl 32301 tel 850 644 9352 fax 850 644 9085 e mail fcrr fcrr org web site fcrr org

fcrr student center activities florida center for reading research - Nov 30 2022

web for questions about the use of these resources please contact the florida center for reading research at fcrr fcrr org florida center for reading research 2010 levy avenue suite 100

eric ed580133 florida center for reading research fcrr reading - Nov 18 2021

web jul 12 2015 the florida center for reading research fcrr reading assessment fra consists of computer adaptive reading

comprehension and oral language screening tasks that provide measures to track growth over time as well as a probability of literacy success pls linked to grade level performance i e the 50th percentile on the

resource database florida center for reading research fcrr - Mar 03 2023

web the fcrr resource database pulls together over 650 materials from across the center s numerous research innovation and engagement activities users can search available materials by resource type project and stakeholder audience we invite you to continue learning and growing with fcrr

the florida center for reading research fcrr - Jun 06 2023

web established in 2002 by the governor s office and legislature the florida center for reading research fcrr is a multidisciplinary research center at florida state university that explores all aspects of reading research

florida center for reading research fcrr linkedin - Mar 23 2022

web 2010 levy avenue suite 100 tallahassee florida 32310 us get directions florida center for reading research fcrr 1 362 followers on linkedin the florida center for reading research was

evidence based reading interventions florida department of education - Jul 27 2022

web the just read florida office was tasked in s 1001 215 8 f s to work with the florida center for reading research to identify scientifically researched and evidenced based reading instructional and intervention programs that incorporate explicit systematic and sequential approaches to teaching phonemic awareness phonics vocabulary fluency

florida center for reading research florida state university news - May 25 2022

web jul 12 2023 published may 6 2021 2 40 pm a florida state university professor has been appointed to a national academies of sciences engineering and medicine nasem committee to

i ve got a golden ticket how to address foundational gaps in reading - Apr 23 2022

web jan 27 2022 map reading fluency florida center for reading research a golden ticket for reading instruction good reading instruction requires lots of evidence based practices and resources working synergistically the florida center for reading research fcrr is an excellent place to turn chock full of ready made activities aligned to help

reading first wikipedia - Aug 28 2022

web reading first reading first is a federal education program in the united states mandated under the no child left behind act and administered by the federal department of education the program requires that schools funded by reading first use scientifically based reading instruction 1

florida center for reading research draws on multiple - Apr 04 2023

web jun 21 2021 ignited by that somber statistic the florida center for reading research fcrr at florida state university is using its extensive network to advance the science of reading with the goal of improving student achievement for all children

every single one of us knows a child who is struggling with reading said fcrr director nicole patton terry

reading first in florida five years of improvement - Feb 02 2023

web she can be contacted at florida center for reading research 2010 levy ave suite 100 tallahassee fl 32310 e mail email protected yaacov petscher ph d is an associate in research at florida state university and director of research at the florida center for reading research dr

florida center for reading research fcrr reading program - Dec 20 2021

web sep 6 2022 florida center for reading research fcrr reading program repository by brian o toole sep 6 2022 the reading program repository is a resource to provide a one stop shop to support florida local education agencies leas with being good consumers of research when selecting reading programs that best meet the needs of

structural steel designer s handbook academia edu - Jun 13 2023

web structural steel designer s handbook see full pdf download pdf see full pdf download pdf related papers structural steel design and construction jaka milyadi download free pdf view pdf section 5 connections steven hernandez download free pdf view pdf aashto lrfd

uss steel design manual by r l brockenbrough open library - Mar 10 2023

web oct 5 2020 uss steel design manual by r l brockenbrough 1968 united states steel corporation edition in english

uss steel design manual 1981 insys fsu edu - Nov 06 2022

web while the unsolicited proposal was us steel rejects cleveland cliffs deal investors keep the faith another rival steel producer has jumped into the bidding war to takeover us steel esmark announced an all cash public offer for us steel for 35 per share on monday esmark said its offer period

uss steel design manual 1981 pdf uniport edu - Jul 02 2022

web uss steel design manual 1981 1 5 downloaded from uniport edu ng on august 24 2023 by guest uss steel design manual 1981 getting the books uss steel design manual 1981 now is not type of inspiring means you could not deserted going afterward books heap or library or borrowing from your contacts to contact them

uss steel design manual bu - May 12 2023

web uss steel design manual uss steel design manual brockenbrough r l publisher united states steel corporation publish date 1968 publish place pittsburgh size 246 p

torsion9 xls excelcalcs - Feb 09 2023

web 1 the simplified torsion analysis used is this program is based on the following reference uss steel design manual 1981 chapter 7 torsion figures 7 9 7 10 pages 157 169 by r l brockenbrough b g johnston 2 this

uss steel design manual 1981 pdf pdf advancement ptsem - Oct 05 2022

web uss steel design manual 1981 pdf 2 7 downloaded from advancement ptsem edu on by guest ensure ductile behavior in any steel structure engineer earthquake resistant structures using today s most advanced ductile steel design techniques this guide gives you the latest seismic resistant design criteria based on research into the recent

uss steel design manual 1981 pdf pdf vodic - Aug 03 2022

web jul 12 2023 uss steel design manual 1981 pdf pdf eventually you will definitely discover a additional experience and completion by spending highly respected authors have reunited to update the well known 1981 edition which is still hailed as one of the best in its field this edition includes recent antenna innovations and applications it features a

uss steel design manual 1981 - Dec 27 2021

web uss steel design manual 1981 oct 11 2022 10 22 140 items part of part of top musical instrument device types microphone manuals uss steel design manual 1981 onkyo ht r540 owners manual a140 service manual blackstar ht 5c manual milestone xprotect client manual peavey max bass preamp manual security master alarm

uss steel design manual 1981 florida state university - Jun 01 2022

web uss steel design manual 1981 is available in our digital library an online access to it is set as public so you can download it instantly our books collection spans in multiple countries allowing you to get the most less latency time to download any of our books like this one

uss steel design manual 1981 - Jan 28 2022

web title uss steel design manual 1981 author blogs sites post gazette com 2023 09 04t00 00 00 00 01 subject uss steel design manual 1981 keywords

uss steel design manual 1981 blogs post gazette com - Feb 26 2022

web we are the best area to aspiration for your referred book and now your grow old to acquire this uss steel design manual 1981 as one of the compromises has been ready we are coming again the extra gathering that this site has to fixed your curiosity we have the funds for the favorite uss steel design manual 1981 sticker album as the option

uss steel design manual google books - Aug 15 2023

web uss steel design manual authors r l brockenbrough bruce gilbert johnston publisher united states steel corporation 1981 length 260 pages export citation

uss steel design manual 1981 download only - Apr 30 2022

web uss steel design manual 1981 thank you for downloading uss steel design manual 1981 maybe you have knowledge that people have search hundreds times for their chosen readings like this uss steel design manual 1981 but end up in malicious downloads rather than enjoying a good book with a cup of tea in the afternoon instead they juggled

uss steel design manual paperback january 1 1981 - Apr 11 2023

web jan 1 1981 uss steel design manual paperback january 1 1981 by r l brockenbrough author b g johnston author 5 0 2 ratings see all formats and editions

2nd edition steel design resources aisc - Dec 07 2022

web modern steel construction december 2005 title source anchor rods and embedments steel construction manual 13th edition p 14 9 aisc steel design guide no 7 industrial buildings roofs to anchor rods second edition

pdf uss steel design manual 1981 free epub zivranch01 zivtech - Sep 04 2022

web aug 16 2023 pdf uss steel design manual 1981 free epub steel designers manual nov 24 2022 this classic manual on structural steel design provides a major source of reference for structural engineers and fabricators working with the leading construction material

uss steel design manual 1981 2022 wrbb neu - Jan 08 2023

web uss steel design manual 1981 is understandable in our digital library an online access to it is set as public hence you can download it instantly our digital library saves in combined countries allowing you to get the most less latency epoch to download any of our books as soon as this one merely said the uss steel design manual 1981 is

uss steel design manual 1981 t pin billy - Mar 30 2022

web looking for a uss steel design manual 1981 online fileslib is here to help you save time spent on searching search results include file name description size and number of pages you can either read uss steel design manual 1981 online or download it to your computer download read online uss steel design manual 1981

uss steel design manual 1981 by mitchellwright4774 issuu - Jul 14 2023

web jul 27 2017 uss steel design manual 1981 save this book to read uss steel design manual 1981 pdf ebook at our online library get uss steel design manual 1981 pdf file for free from our online library

10 little rubber ducks by eric carle youtube - Jun 02 2022

web 10 little rubber ducks fall off a boat in the ocean count the ducks and see where they float and who they meet goofandgigglestory timewit5914 counting st

10 rubber duckies hardcover august 1 2005 amazon com - Feb 10 2023

web aug 1 2005 10 rubber duckies sitting on the tub they all move over and one falls in glub glub glub this delightful twist on the popular song follows nine sunny yellow duckies and a funky bright blue one as they dive fall plop and drop into the water

ten rubber duckies amazon com - Aug 16 2023

web jan 8 2008 ten rubber duckies is from the same folks who created t en little ladybugs and good night sweet butterflies two books that started a phenomenon selling more than 1 5 million copies each children and parents will love cheering for

their favorite rubber ducky in this fun filled race

10 little rubber ducks by eric carle hardcover barnes noble - Aug 04 2022

web jun 7 2005 this classic picture book from the new york times bestselling author of the very hungry caterpillar and the grouchy ladybug stars 10 little rubber ducks and their globe trotting adventures in eric carle s poignant and funny story illustrated with strikingly designed collages readers are taken on an exciting voyage of discovery

10 little rubber ducks by eric carle goodreads - Dec 08 2022

web jan 1 2005 ten little rubber ducks by eric carle the book is cute it teaches counting and directions a company produces ducks they get put on a ship to be shipped worldwide in each box sits ten rubber ducks one box falls in after a bad storm and the ten ducks slowly drift apart in the water

10 little rubber ducks w words efx music youtube - May 13 2023

web may 27 2017 10 little rubber ducks w words efx music support the author by purchasing the book here amzn to 2ck7yzt eric carle s fun tale about 10 rubber ducks adrift in the ocean

5 activities inspired by the 10 little rubber ducks book - Dec 28 2021

web oct 24 2019 mia brown 5 activities inspired by the 10 little rubber ducks book the book 10 little rubber ducks by eric carle is beloved by children all around the world and at sunshine and rainbows learning center in joliet illinois they did a number of fun activities with their own little rubber ducks inspired by the book book activities and

10 little rubber ducks carle eric free download borrow and - Sep 05 2022

web language english laura ingalls wilder award 2003 when a storm strikes a cargo ship ten rubber ducks are tossed overboard and swept off in ten different directions based on a factual incident

10 rubber duckies worldcat org - Jul 03 2022

web summary ten little rubber ducks sit on the edge of a tub and they fall into the tub one by one print book english 2005 edition view all formats and editions

10 little rubber ducks by eric carle kids book read aloud - Jul 15 2023

web feb 7 2022 8 share 1 6k views 1 year ago new york ducks overboard shouts the captain as a giant wave washes a box of 10 little rubber ducks off his cargo ship and into the sea the ducks are

10 little rubber ducks board book an easter and springtime - Oct 06 2022

web jan 26 2010 shouts the captain as a giant wave washes a box of 10 little rubber ducks off his cargo ship and into the sea the ducks are swept away in various directions one drifts west where a friendly dolphin jumps over it a whale sings to another but as the sun sets the 10th little rubber duck is left all alone bobbing helplessly on the big wide sea

10 rubber duckies by william b winburn goodreads - Apr 12 2023

web 10 rubber duckies by william b winburn photographs 3 33 rating details 24 ratings 5 reviews a witty and whimsical take on a favorite rhyme plus amusing photographs make this oversize board book irresistible fun and a great way for youngsters to practice counting too 10 rubber duckies sitting on the tub

10 rubber duckies winburn william b free download borrow - Jun 14 2023

web ten little rubber ducks sit on the edge of a tub and they fall into the tub one by one die cut cover

results for 10 rubber ducks tpt - Jan 29 2022

web rick s creations your little ones will have fun with this sequencing activity after reading 10 little rubber ducks by eric carle a perfect activity for an individual or for a whole group give each student a blank sheet and another sheet with picture cards

10 little rubber ducks by eric carle memoria press - Feb 27 2022

web 10 little rubber ducks by eric carle tells the story of ten rubber ducks who are washed overboard in a storm the ducks were made in a factory and loaded on a ship to go all over the world but when the wind and waves wash them into the ocean their lives become a little more exciting

ten rubber duckies by dawn bentley goodreads - Mar 11 2023

web ten rubber duckies dawn bentley heather cahoon illustrator melanie gerth concept by 4 00 40 ratings5 reviews ten rubber duckies is from the same folks who created t en little ladybugs and good night sweet butterflies two books that started a phenomenon selling more than 1 5 million copies each

ten rubber duckies dawn bentley amazon ca books - Nov 07 2022

web children and parents will love cheering for their favorite rubber ducky in this fun filled race with each turn of the page one of the ten rubber duckies splashes closer to the finish line this playful story also teaches counting and colors and the winner squeaks

10 rubber duckies google books - Jan 09 2023

web 10 rubber duckies sitting on the tub they all move over and one falls in glub glub glub this delightful twist on the popular song follows nine sunny yellow duckies and a funky bright blue one as they dive fall plop and drop into the water

ten rubber duckies by dawn bentley open library - May 01 2022

web jan 8 2008 hardcover in english 0375840435 9780375840432 aaaa not in library libraries near you worldcat 1 ten rubber duckies a wacky quacky counting adventure 2008 robin corey books in english 1st ed

10 rubber duckies hardcover 1 august 2005 amazon singapore - Mar 31 2022

web aug 1 2005 10 rubber duckies hardcover 1 august 2005 by harriet ziefert contributor william b winburn photographer 4 7 4 7 out of 5 stars 3 ratings