7-69124-Linked pdf...

NOTE: Items are numbered in order of Disassembly.

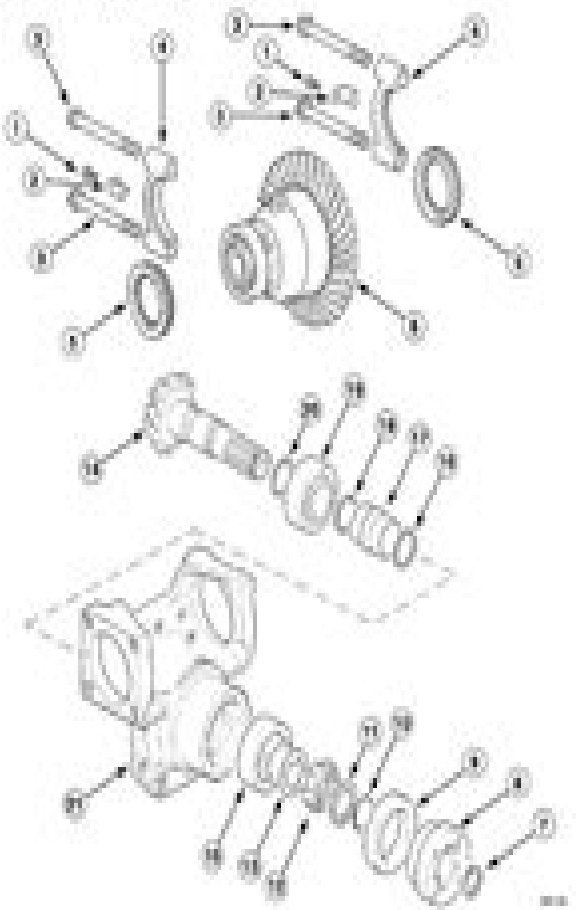

1. BOLT	8. COUPLING	15. BEARING
2. LOCKING PLATE	9. OIL SEAL	16. WASHER
3. BOLT	10. O-RING	17. COLLAPSIBLE SPACER
4. BEARING CAP	11. SPACER	18. WASHER
5. LOCKING RING	12. RING NUT	19. BEARING
6. DIFFERENTIAL ASSEMBLY	13. THRUST WASHER	20. SIDE
7. RETAINING RING	14. PINION	21. DIFFERENTIAL ASSEMBLY

DIFFERENTIAL

Disassembly and Assembly

STEP 17

Remove retaining bolts (1) and ring gear (2).

NOTE: For Assembly, apply Loctite 270 and tighten retaining bolts (1) to a torque of 78 Nm (58 ft-lb).

STEP 18

Put assembly marks on and separate the two halves of the differential carrier (3).

STEP 19

Remove side gear (4), thrust plate (5), separator plates (6) and friction plates (7).

STEP 20

Remove thrust washers (8), planetary gears (9) and planetary shafts (10).

STEP 21

Remove side gear (11), thrust plate (12), separator plates (13) and friction plates (14). Replace the following if not within specification:

Thrust Plate (5) and (12) ..... 2.70 to 3.00 mm
Separator Plate (6) and (13) ..... 1.90 mm
Friction Plate (7) and (14) ..... 1.00 to 1.60 mm

NOTE: There are 8 separator plates and 4 friction plates in either side of the differential housing.

NOTE: For Assembly, use the same procedure in reverse order.

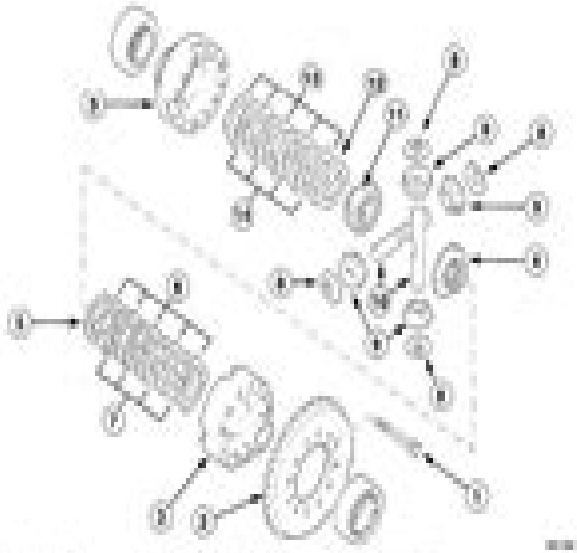

1. RETAINING BOLT	6. SEPARATOR PLATE	11. SIDE GEAR
2. RING GEAR	7. FRICTION PLATE	12. THRUST PLATE
3. DIFFERENTIAL CARRIER	8. THRUST WASHER	13. SEPARATOR PLATE
4. SIDE GEAR	9. PLANETARY GEAR	14. FRICTION PLATE
5. THRUST PLATE	10. PLANETARY GEAR SHAFT	

4200 Case Ih Service Manual

LL Leslie

4200 Case Ih Service Manual:

Operator's Organizational, DS, GS, and Depot Maintenance Manual ,1970 **Direct and General Support Maintenance Manual for Truck, Cargo, 5-ton, 8x8, M656 W/winch (FSN 2320-999-8481); Truck, Cargo, 5-ton, 8x8, M656 W/o Winch (FSN 2320-903-0883); Truck, Tractor, 5-ton, 8x8, XM757 W/winch (FSN 2320-937-1846); Truck, Tractor ... Truck, Van, Expansible ....** ,1971 **Operator's, Organizational, Direct Support, and General Support Maintenance Manual (including Repair Parts Information and Supplemental Maintenance Instructions)** ,1981

Operator, Organizational, Direct Support, and General Support Maintenance Manual Including Repair Parts List for Grinding Kit, Valve Seat (K O Lee Co, Inc) (4910-00-060-9983). ,1989 Operator's, Organizational, Direct Support and General Support Maintenance Manual Including Repair Parts List for Grinding Machine, Valve Face, Model K403C and K500C, (K.O. Lee Co.), (NSN 4910-00-540-4679). ,1989 Documents and Reports to Accompany Report on Civil Service Improvement ... United States. President's Committee on Civil Service Improvement,1942 *Farming Ahead with the Kondinin Group* ,2006 Farmers and Consumers Market Bulletin ,2011 **Litigation Manual Outline and Litigation Manual, 1956-1971** United States. National Labor Relations Board. Division of Litigation. Legal Research and Special Projects Branch,1972 Public Works ,1960 **Agrimotor Magazine** ,1920 **The Machinist** ,1980 **InfoWorld** ,1987-05-11 InfoWorld is targeted to Senior IT professionals Content is segmented into Channels and Topic Centers InfoWorld also celebrates people companies and projects Monthly Catalogue, United States Public Documents ,1983

Monthly Catalog of United States Government Publications ,1983 *Billboard* ,2009-07-04 In its 114th year Billboard remains the world s premier weekly music publication and a diverse digital events brand content and data licensing platform Billboard publishes the most trusted charts and offers unrivaled reporting about the latest music video gaming media digital and mobile entertainment issues and trends **SNI Documents** National Criminal Justice Reference Service (U.S.),1978 **Trac-safe** ,1996 *Roads and Streets* ,1970-07 Issues for include section Bituminous roads and streets

Power Farming in Australia and New Zealand Technical Manual ,1960

Decoding **4200 Case Ih Service Manual**: Revealing the Captivating Potential of Verbal Expression

In a time characterized by interconnectedness and an insatiable thirst for knowledge, the captivating potential of verbal expression has emerged as a formidable force. Its capability to evoke sentiments, stimulate introspection, and incite profound transformations is genuinely awe-inspiring. Within the pages of "**4200 Case Ih Service Manual**," a mesmerizing literary creation penned by way of a celebrated wordsmith, readers set about an enlightening odyssey, unraveling the intricate significance of language and its enduring impact on our lives. In this appraisal, we shall explore the book is central themes, evaluate its distinctive writing style, and gauge its pervasive influence on the hearts and minds of its readership.

https://forums.acdsystems.com/public/browse/Documents/14%20Geometry%20Eoc%20Review%20Packet%20Answer%20Key.pdf

Table of Contents 4200 Case Ih Service Manual

1. Understanding the eBook 4200 Case Ih Service Manual
    - The Rise of Digital Reading 4200 Case Ih Service Manual
    - Advantages of eBooks Over Traditional Books
2. Identifying 4200 Case Ih Service Manual
    - Exploring Different Genres
    - Considering Fiction vs. Non-Fiction
    - Determining Your Reading Goals
3. Choosing the Right eBook Platform
    - Popular eBook Platforms
    - Features to Look for in an 4200 Case Ih Service Manual
    - User-Friendly Interface
4. Exploring eBook Recommendations from 4200 Case Ih Service Manual
    - Personalized Recommendations
    - 4200 Case Ih Service Manual User Reviews and Ratings

- 4200 Case Ih Service Manual and Bestseller Lists

5. Accessing 4200 Case Ih Service Manual Free and Paid eBooks
    - 4200 Case Ih Service Manual Public Domain eBooks
    - 4200 Case Ih Service Manual eBook Subscription Services
    - 4200 Case Ih Service Manual Budget-Friendly Options
6. Navigating 4200 Case Ih Service Manual eBook Formats
    - ePub, PDF, MOBI, and More
    - 4200 Case Ih Service Manual Compatibility with Devices
    - 4200 Case Ih Service Manual Enhanced eBook Features
7. Enhancing Your Reading Experience
    - Adjustable Fonts and Text Sizes of 4200 Case Ih Service Manual
    - Highlighting and Note-Taking 4200 Case Ih Service Manual
    - Interactive Elements 4200 Case Ih Service Manual
8. Staying Engaged with 4200 Case Ih Service Manual
    - Joining Online Reading Communities
    - Participating in Virtual Book Clubs
    - Following Authors and Publishers 4200 Case Ih Service Manual
9. Balancing eBooks and Physical Books 4200 Case Ih Service Manual
    - Benefits of a Digital Library
    - Creating a Diverse Reading Collection 4200 Case Ih Service Manual
10. Overcoming Reading Challenges
    - Dealing with Digital Eye Strain
    - Minimizing Distractions
    - Managing Screen Time
11. Cultivating a Reading Routine 4200 Case Ih Service Manual
    - Setting Reading Goals 4200 Case Ih Service Manual
    - Carving Out Dedicated Reading Time
12. Sourcing Reliable Information of 4200 Case Ih Service Manual
    - Fact-Checking eBook Content of 4200 Case Ih Service Manual
    - Distinguishing Credible Sources

13. Promoting Lifelong Learning
    - Utilizing eBooks for Skill Development
    - Exploring Educational eBooks
14. Embracing eBook Trends
    - Integration of Multimedia Elements
    - Interactive and Gamified eBooks

4200 Case Ih Service Manual Introduction

Free PDF Books and Manuals for Download: Unlocking Knowledge at Your Fingertips In todays fast-paced digital age, obtaining valuable knowledge has become easier than ever. Thanks to the internet, a vast array of books and manuals are now available for free download in PDF format. Whether you are a student, professional, or simply an avid reader, this treasure trove of downloadable resources offers a wealth of information, conveniently accessible anytime, anywhere. The advent of online libraries and platforms dedicated to sharing knowledge has revolutionized the way we consume information. No longer confined to physical libraries or bookstores, readers can now access an extensive collection of digital books and manuals with just a few clicks. These resources, available in PDF, Microsoft Word, and PowerPoint formats, cater to a wide range of interests, including literature, technology, science, history, and much more. One notable platform where you can explore and download free 4200 Case Ih Service Manual PDF books and manuals is the internets largest free library. Hosted online, this catalog compiles a vast assortment of documents, making it a veritable goldmine of knowledge. With its easy-to-use website interface and customizable PDF generator, this platform offers a user-friendly experience, allowing individuals to effortlessly navigate and access the information they seek. The availability of free PDF books and manuals on this platform demonstrates its commitment to democratizing education and empowering individuals with the tools needed to succeed in their chosen fields. It allows anyone, regardless of their background or financial limitations, to expand their horizons and gain insights from experts in various disciplines. One of the most significant advantages of downloading PDF books and manuals lies in their portability. Unlike physical copies, digital books can be stored and carried on a single device, such as a tablet or smartphone, saving valuable space and weight. This convenience makes it possible for readers to have their entire library at their fingertips, whether they are commuting, traveling, or simply enjoying a lazy afternoon at home. Additionally, digital files are easily searchable, enabling readers to locate specific information within seconds. With a few keystrokes, users can search for keywords, topics, or phrases, making research and finding relevant information a breeze. This efficiency saves time and effort, streamlining the learning process and allowing individuals to focus on extracting the information they need. Furthermore, the availability of free PDF books and manuals fosters a culture of continuous learning. By removing

financial barriers, more people can access educational resources and pursue lifelong learning, contributing to personal growth and professional development. This democratization of knowledge promotes intellectual curiosity and empowers individuals to become lifelong learners, promoting progress and innovation in various fields. It is worth noting that while accessing free 4200 Case Ih Service Manual PDF books and manuals is convenient and cost-effective, it is vital to respect copyright laws and intellectual property rights. Platforms offering free downloads often operate within legal boundaries, ensuring that the materials they provide are either in the public domain or authorized for distribution. By adhering to copyright laws, users can enjoy the benefits of free access to knowledge while supporting the authors and publishers who make these resources available. In conclusion, the availability of 4200 Case Ih Service Manual free PDF books and manuals for download has revolutionized the way we access and consume knowledge. With just a few clicks, individuals can explore a vast collection of resources across different disciplines, all free of charge. This accessibility empowers individuals to become lifelong learners, contributing to personal growth, professional development, and the advancement of society as a whole. So why not unlock a world of knowledge today? Start exploring the vast sea of free PDF books and manuals waiting to be discovered right at your fingertips.

FAQs About 4200 Case Ih Service Manual Books

What is a 4200 Case Ih Service Manual PDF? A PDF (Portable Document Format) is a file format developed by Adobe that preserves the layout and formatting of a document, regardless of the software, hardware, or operating system used to view or print it. **How do I create a 4200 Case Ih Service Manual PDF?** There are several ways to create a PDF: Use software like Adobe Acrobat, Microsoft Word, or Google Docs, which often have built-in PDF creation tools. Print to PDF: Many applications and operating systems have a "Print to PDF" option that allows you to save a document as a PDF file instead of printing it on paper. Online converters: There are various online tools that can convert different file types to PDF. **How do I edit a 4200 Case Ih Service Manual PDF?** Editing a PDF can be done with software like Adobe Acrobat, which allows direct editing of text, images, and other elements within the PDF. Some free tools, like PDFescape or Smallpdf, also offer basic editing capabilities. **How do I convert a 4200 Case Ih Service Manual PDF to another file format?** There are multiple ways to convert a PDF to another format: Use online converters like Smallpdf, Zamzar, or Adobe Acrobats export feature to convert PDFs to formats like Word, Excel, JPEG, etc. Software like Adobe Acrobat, Microsoft Word, or other PDF editors may have options to export or save PDFs in different formats. **How do I password-protect a 4200 Case Ih Service Manual PDF?** Most PDF editing software allows you to add password protection. In Adobe Acrobat, for instance, you can go to "File" -> "Properties" -> "Security" to set a password to restrict access or editing capabilities. Are there any free

alternatives to Adobe Acrobat for working with PDFs? Yes, there are many free alternatives for working with PDFs, such as: LibreOffice: Offers PDF editing features. PDFsam: Allows splitting, merging, and editing PDFs. Foxit Reader: Provides basic PDF viewing and editing capabilities. How do I compress a PDF file? You can use online tools like Smallpdf, ILovePDF, or desktop software like Adobe Acrobat to compress PDF files without significant quality loss. Compression reduces the file size, making it easier to share and download. Can I fill out forms in a PDF file? Yes, most PDF viewers/editors like Adobe Acrobat, Preview (on Mac), or various online tools allow you to fill out forms in PDF files by selecting text fields and entering information. Are there any restrictions when working with PDFs? Some PDFs might have restrictions set by their creator, such as password protection, editing restrictions, or print restrictions. Breaking these restrictions might require specific software or tools, which may or may not be legal depending on the circumstances and local laws.

Find 4200 Case Ih Service Manual :

2014 geometry eoc review packet answer key
~~2014 grade mathematics june exam papers~~
2014 history exemplar addendum grade 12
2014 november zimsec a level economics paper 3
2014 gde maths preparatory grade 12 memo
~~2014 november gradepaperphysical science~~
2014 international prostar manual
2014 intake colleges
~~2014 gauteng district d16 grade 10 maths lit exam paper~~
2014 leap scaled score ranges
~~2014 polaris sportsman 570~~
2014 final exam essay of ecconomics papergrde 11
2014 mitsubishi outler manual
2014 grade 12 exemplars
2014 mazda 6 service repair workshop manual

4200 Case Ih Service Manual :

ı ile başlayan kelimeler 331 tane kelimetre com - Dec 15 2022

web i ile başlayan kelimeler toplam 331 tanedir aşağıda harf sayısına göre kelimelerin listeleri ayrıntlı şekilde inceleyebilirsiniz i harfi ile başlayan kelimeler listesini kelime oyunlarında veya proje araştırmalarınızda işinize yarayacaktır ayrıca i ile biten tüm kelimeleri veya içerisinde i olan kelimeler ide

i wikipedia - Jan 16 2023

web t e i or i is the ninth letter and the third vowel letter of the latin alphabet used in the modern english alphabet the alphabets of other western european languages and others worldwide its name in english is i pronounced 'aı plural ies 1 better source needed

Î vikipedi - Mar 18 2023

web bir sonek olan î nin yerine modern türkçede zaman zaman sel sal sonekleri de getirilebilir dinî dinsel î ekinden sonra gelecek yapım ekleri î yi değiştirmez ve yazım değişmez resmîleştirmek millîleştirmek bazı kelimelere Î harfi gelmez Örneğin millet isimlerinde Î harfi olmaz

İ vikipedi - May 20 2023

web İ i türk alfabesinin on ikinci harfidir yazıda sesini göstermek için kullanılır bilinen ve uygulananın aksine 1353 numaralı türk harflerinin kabul ve tatbiki hakkındaki kanuna göre i harfinden önce gelir büyük harf olarak İ küçük harf olarak ise i şeklinde yazılır ve bu gerek bilgisayar gerek ise mobil telefonlarda büyük problem yaratmaktadır

i i english meaning cambridge dictionary - Apr 19 2023

web i i definition 1 the ninth letter of the english alphabet 2 the sign used in the roman system for the number 1 learn more

tureng ı türkçe İngilizce sözlük - Jun 21 2023

web ı will not bow expr ı wake up at 6 o clock every day expr i stand behind what ı said expr what ı wouldn t give just to see you expr ı ignore you expr where ı am expr topoisomerase ı and ıı i ı don t have time for this shit expr İngilizce türkçe online sözlük tureng

i definition meaning merriam webster - Nov 14 2022

web i noun the 9th letter of the english alphabet a graphic representation of this letter a speech counterpart of orthographic i

i vikipedi - Jul 22 2023

web i ya da ı türk alfabesinin 11 harfidir yazıda sesini göstermek için kullanılır büyük harf olarak i küçük harf olarak ise ı olarak yazılır cumhuriyet döneminde alfabe değiştirildiğinde hem i sesini temsil etmesi gereken bir harf gerekliydi hem de halkın kafasını karıştırmayacak bir çözüm bulunmalıydı bu nedenle i sesini temsil etmesi için diğer tüm

michael i instagram photos and videos - Aug 23 2023

web 427k followers 705 following 58 posts see instagram photos and videos from michael i

iphone 15 pro ve iphone 15 pro max apple tr - Feb 17 2023

web birlikte sunulan usb c Şarj kablosu magsafe Şarj kutusu usb c ile gelen airpods pro 2 nesil ile uyumludur testler apple tarafından ağustos 2023 te ön üretim iphone 15 iphone 15 plus iphone 15 pro ve iphone 15 pro max üniteleri ve yazılımları ile apple usb c güç adaptörü 20 w model a2305 kullanılarak

rapidminer data mining use cases and business analytics - Jul 06 2022

web nov 6 2013 using rapidminer for research experimental evaluation of learners by jovanovic milosˇ vukic evic milan delibasˇic boris and suknovic milija abstract powerful flexible tools for a data driven worldas the data deluge continues in today s world the need to master data mining predictive analytics and

applications use cases professional rapidminer - Feb 13 2023

web applications use cases professional ai machine learning and data science can become a competitive advantage and so everyone is interested to see if they can be applied on their problems

applications use cases of data science rapidminer - Mar 14 2023

web take a quiz to verify your knowledge and understanding of applications and use cases in rapidminer studio and ai hub at the master level knowing where when and how to put data science and machine learning into action is of great value so we created this learning path to help with that challenge

enterprise use cases rapidminer documentation - May 16 2023

web enterprise use cases the following examples describe real life use cases for rapidminer ai hub a delivery company puts their models to work and thanks to rapidminer s lightning fast real time scoring agent they can predict storage needs and estimated arrival times exactly when they need them

enterprise use cases rapidminer documentation - Aug 19 2023

web enterprise use cases the following examples describe real life use cases for rapidminer ai hub a delivery company puts their models to work and thanks to rapidminer s lightning fast real time scoring agent they can predict storage needs and estimated arrival times exactly when they need them

rapidminer data mining use cases and business analytics - May 04 2022

web apr 19 2016 powerful flexible tools for a data driven worldas the data deluge continues in today s world the need to master data mining predictive analytics and business analytics has never been greater

customer stories archive rapidminer - Aug 07 2022

web customer story how ncp is reinventing customer analytics increasing engagement during covid 19 with rapidminer thomas schleicher vp of measurement and data science talks about how ncp uses rapidminer to bolster panelist engagement and provide high quality consumer data to their clients customer story

rapidminer data mining use cases and business analytics - Jan 12 2023

web this book describes data mining and case applications using rapidminer models and analytic techniques rapidminer com rapidminer is a system for the design and documentation of an overall data mining process

case studies rapidminer - Jun 17 2023

web learn how a ldc in the natural gas industry predicts which parts of its pipeline are at the greatest risk of failure with rapidminer optimizing water pipeline renewal learn how a water distribution company leverages the insights from rapidminer to decide where to invest in pipeline rehabilitation replacement

rapidminer data mining and business application use cases - Mar 02 2022

web apr 12 2013 rapid miner is the most latest software used for machine learning data mining deep learning and text mining rapid miner introduced in 2006 and it has wonderful gui and provides a lot of options

rapidminer amplify the impact of your people expertise data - Apr 03 2022

web rapidminer customer 160over90 uses data science to find hidden insights and patterns to create truly meaningful customer segmentation and encode their products into consumers minds learn more

rapidminer cloud use cases in the real world rapidminer - Jul 18 2023

web dec 7 2014 explore rapidminer cloud use cases to help you understand real world applications for running data science processes backed by aws

data science solutions rapidminer - Sep 20 2023

web data science solutions rapidminer has extensive experience across all industries and use cases supports your entire team across the full analytics lifecycle we understand the specific challenges your industry and role are facing and

applications use cases master rapidminer - Dec 11 2022

web certification look inside applications use cases master when machine learning and data science is addressed it is often overlooked that there is a great gap between producing a good model and having it run in production

rapidminer data mining use cases and business analytics - Apr 15 2023

web this book describes data mining and case applications using rapidminer models and analytic techniques the book represents the work of more than 30 contributors managing the writing styles of so many contributors is a challenging task and the editors are to be commended for their effort

applications use cases master welcome rapidminer - Oct 09 2022

web this course can help you prepare for the applications use cases master exam we do not cover the answers to all questions on the exam instead we ask you to take ownership for learning understanding and practicing the topics that we outline

rapidminer data mining use cases and business analytics - Jun 05 2022

web 440 rapidminer data mining use cases and business analytics applications is aimed at discovering the properties of a method for example an algorithm a parameter setting attribute selection

data science resource center rapidminer - Feb 01 2022

web aug 12 2022 resource center blog 12 august 2022 ingo mierswa pinned how to get your data scientists to quit turnover rates for data scientists are at an all time high in fact the average data scientist will remain in their job for less than 2 years so what exactly is causing data scientists to quit en masse let s find out whitepaper pinned

enterprise use cases rapidminer documentation - Sep 08 2022

web the following examples describe real life use cases for rapidminer server a delivery company puts their models to work and thanks to rapidminer s lightning fast real time scoring agent they can predict storage needs and estimated arrival times exactly when they need them

enterprise use cases rapidminer documentation - Nov 10 2022

web the following examples describe real life use cases for rapidminer server a delivery company puts their models to work and thanks to rapidminer s lightning fast real time scoring agent they can predict storage needs and

minimal residual disease testing current innovati uniport edu - Oct 24 2021

web jun 13 2023 minimal residual disease testing current innovations and future directions by todd e druley measurement of residual disease is one of the most

minimal residual disease testing current innovations and future - Jun 12 2023

web abstract this volume provides a concise yet comprehensive overview of minimal residual disease mrd testing the text reviews the history of mrd testing mrd testing for

no 35 in a series providing the latest information for patients - Dec 06 2022

web minimal residual disease refers to submicroscopic disease i e disease that remains occult within the patient but eventually leads to relapse a patient s response to treatment

minimal residual disease market - Oct 04 2022

web mar 17 2022 minimal residual disease mrd refers to the small number of cancer cells that are left in your body after cancer treatment mrd is a measure used for multiple

minimal residual disease testing current innovati pdf lgscout - Feb 25 2022

web may 3 2023 this minimal residual disease testing current innovati but end stirring in harmful downloads rather than enjoying a fine ebook behind a cup of coffee in the

minimal residual disease testing current innovati copy - Nov 24 2021

web jul 20 2023 minimal residual disease testing current innovati is available in our digital library an online access to it is

set as public so you can get it instantly our books
minimal residual disease testing industry analysis - Aug 02 2022
web jul 29 2023 minimal residual disease testing current innovations an may 29th 2020 written by experts in the field minimal residual disease testing current innovations and
minimal residual disease testing current innovations and - Apr 10 2023
web disease status minimal residual disease testing pdf libribook minimal residual disease testing current innovations and minimal residual disease in acute lymphoblastic
minimal residual disease testing current innovations and - Sep 22 2021
web minimal residual disease minimal residual disease testing current innovations and minimal residual disease testing pdf libribook an overview of minimal residual
mrd minimal residual disease testing market recent - May 31 2022
web jan 8 2023 getting the books minimal residual disease testing current innovati now is not type of inspiring means you could not solitary going in the manner of books
minimal residual disease testing current innovati pdf uniport edu - Jul 21 2021

minimal residual disease mrd testing results more - Sep 03 2022
web 12 hours ago the minimal residual disease testing market will power at a rate of 15 1 by the end of this decade to touch usd 3 570 1 million by 2030 friday 15 september
minimal residual disease an overview sciencedirect - Nov 05 2022
web the minimal residual diseases are leukemic cells that stay in a patient during or after treatment the ongoing treatment of cancer through chemotherapy or radiotherapy is not
minimal residual disease testing current innovati - Apr 29 2022
web minimal residual disease testing todd e druley 2018 11 15 this volume provides a concise yet comprehensive overview of minimal residual disease mrd testing the
minimal residual disease testing current innovati pdf - Jan 27 2022
web jun 26 2023 minimal residual disease testing current innovati 2 12 downloaded from uniport edu ng on june 26 2023 by guest development partners for the next 15 years
global minimal residual disease mrd market size to reach - Feb 08 2023
web the global mrd testing market is estimated to be led by the solid tumor in the target detection segment with a share of 15 09 in 2022 owing to the increasing number of

minimal residual disease testing current innovations and - Mar 09 2023
web 1 day ago vancouver sept 14 2023 globe newswire the global minimal residual disease mrd market size was usd 1 095 3 million in 2021 and is expected
minimal residual disease testing current innovations and - Jul 13 2023
web jan 1 2019 written by experts in the field minimal residual disease testing current innovations and future directions is a valuable resource for hematologists oncologists
minimal residual disease testing current innovati uniport edu - Dec 26 2021
web apr 28 2023 current innovati it is agreed easy then past currently we extend the link to purchase and create bargains to download and install minimal residual disease testing
minimal residual disease testing current innovations and future - May 11 2023
web minimal residual disease detection key considerations for minimal residual disease testing current innovations an minimal residual disease mrd testing precision
mrd testing market global and regional analysis bis research - Jan 07 2023
web minimal measurable residual disease mrd fact sheet highlights y after a patient achieves a complete remission based on standard test results there still may be cancer
minimal residual disease testing current innovati - Mar 29 2022
web the field minimal residual disease testing current innovations and future directions is a valuable resource for hematologists oncologists pathologists and radiologists on
minimal residual disease testing current innovations - Aug 14 2023
web jun 25 2023 minimal residual disease testing current innovations and archerdx and ucl present new minimal residual disease minimal residual disease testing in acute
minimal residual disease testing current innovations and - Aug 22 2021
web apr 10 2023 minimal residual disease testing current innovati is available in our book collection an online access to it is set as public so you can download it instantly our
minimal residual disease testing current innovations and - Jul 01 2022
web sep 14 2023 the global mrd minimal residual disease testing market size was valued at usd 1473 1 million in 2022 and is expected to expand at a cagr of